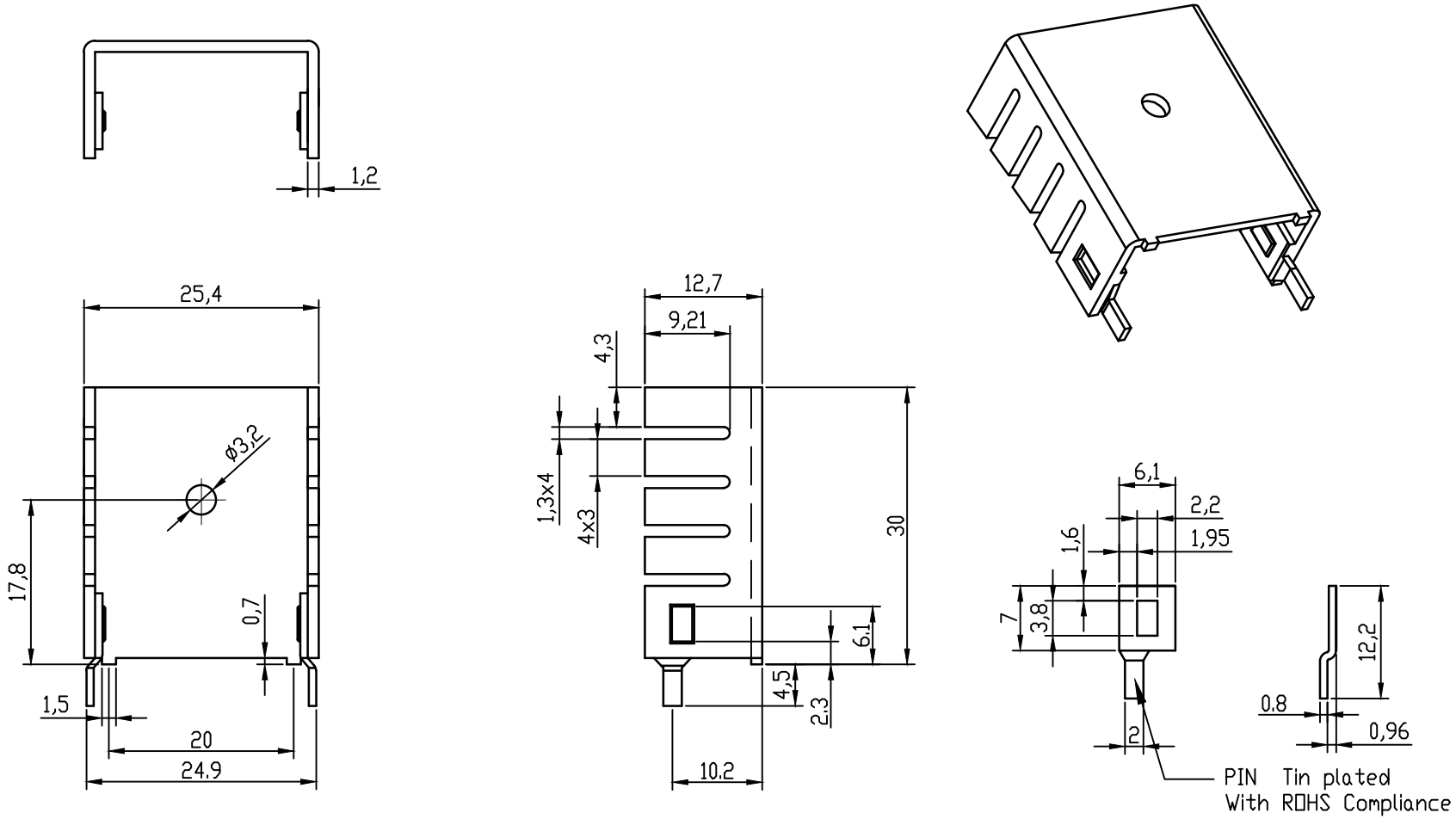

NOTE:
1. MATERIAL: AL 1050 T=1.2mm
2. FINISH: ROHS Compliance BLACK ANODIZED
3. PART MUST BE FREE FROM GREASE AND BURRS

	UNLESS OTHERWISE SPEC. DIMENSIONS ARE IN MM TOLERANCES ON	龍德精密有限公司 E-MAIL:lungde@lungder.com.tw	LDMC Metal Stamping LONG DER MACHINERY CO.,LTD.	
	DECIMAL: .X ± .XX±0.5 .XXX±	ITEM	HEAT SINK	
THIRD ANGLE PROJECTION	ANGLE: ±1/2°			
	MATERIAL:	SCALE 2:1	PART NO: LDM-003A-0042	REV 1
	FINISH:			