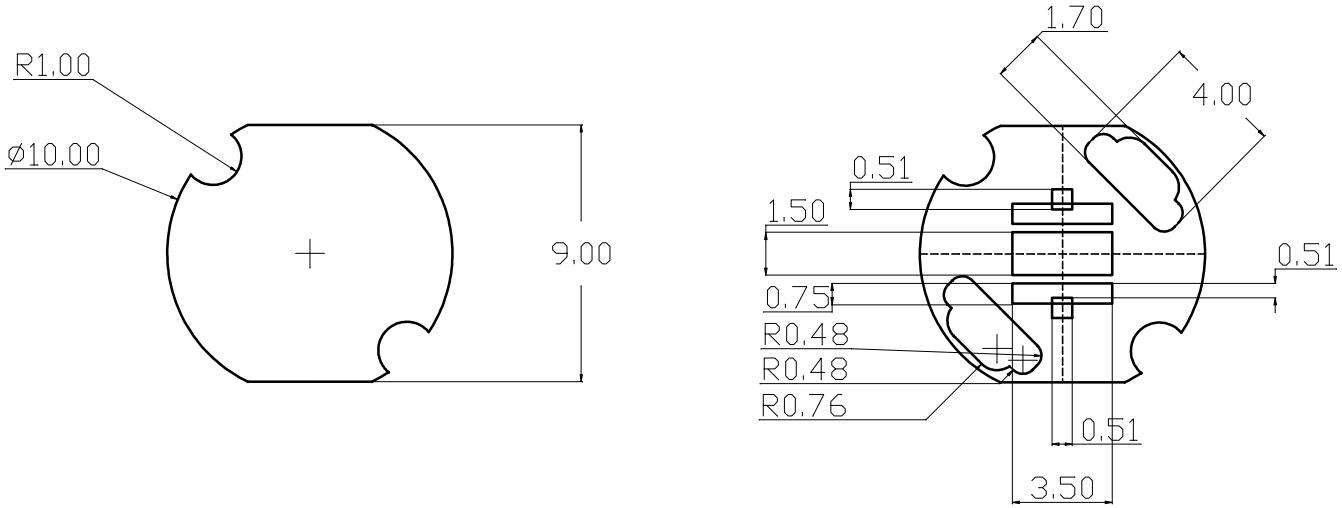

All dimensions in mm

Title: NV-1CX10-XP					NIVISS ul. Rdestowa 53D 80-577 Gdynia Poland
Nr.: DK101015SB01		Date: 2010-12-16	Sheet: 1 of 1	Revision: A Date: 2010-12-16	
Size: A4	Scale: 4:1	Drawn by: S. Babicz			