Rev.	ECN Number	Description	Date	Drawn	Checkd	Approved
X1		FIRST RELEASE	02/23'12			

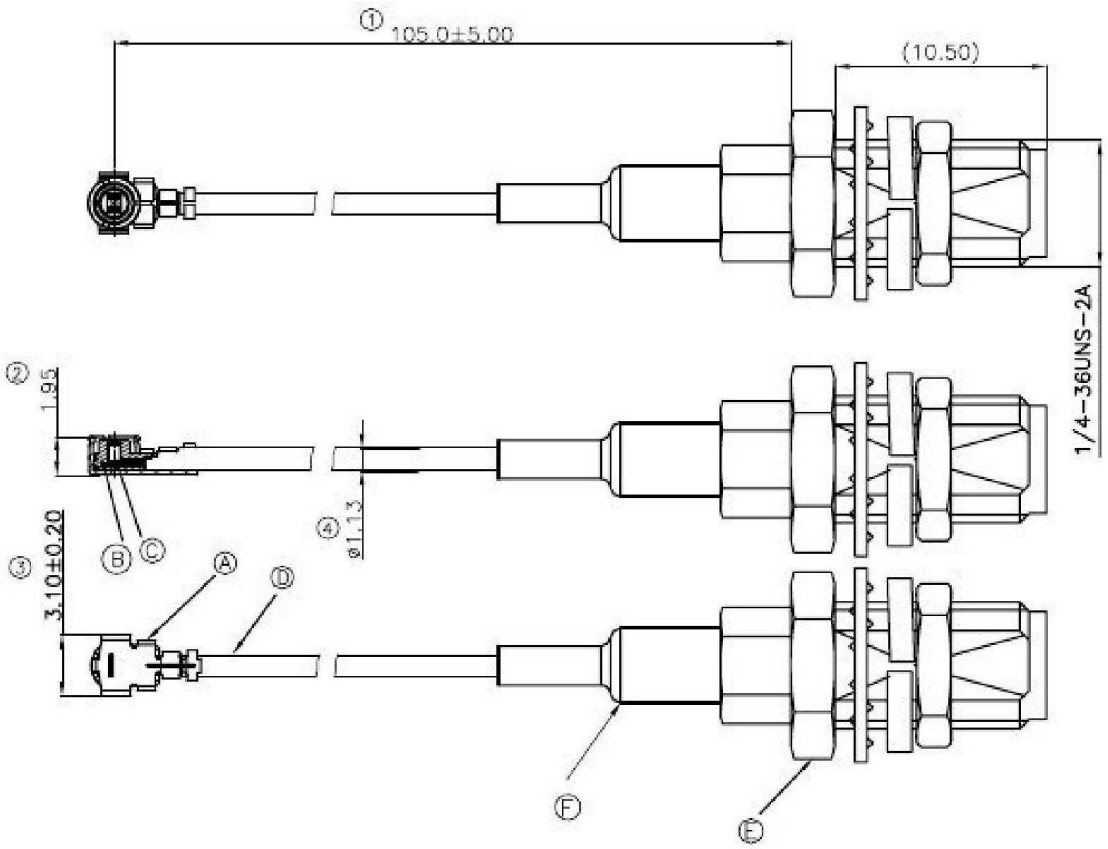

Note:

1.Technology Parameter

1.1 Voltage Rating	200VAC (R.M.S)
1.2 Frequency Range	0~3G Hz
1.3 Nominal Characteristic Impedance	50 ohms
1.4 Operating Temperature Range	−40℃~+85℃
1.5 Operating Humidity	95%R.H.MAX

2.Electric Performance

2.1 Insulation Resistance	500M ohms
2.2 Contact Resistance	
2.2.1 Inner Contact	20 mohms Max.
2.2.2 Outer Contact	20 mohms Max.
2.3 Withstand Voltage	200V AC 1 Min
2.4 VSWR*	<=1.6@ 0~3.0GHz

3. Mechanism Performance

3.1 Durability	30 Cycles

4. All the material followed the ROHS standard.

ITEM	PART NO.	Q'TY	DESCRIPTION	MATERIAL/FINISH
Ⓕ		1	Heat shrink tube	PLASTIC
Ⓔ		1	SMA receptacle	COPPER AND PLASTIC
Ⓓ		1	CABLE(ø1.13,Colour:GRAY)	COPPER/Tin PLATED OVER INNER
Ⓒ		1	CONTACT	COPPER ALLOY/Au PLATED OVER Ni
Ⓑ		1	HOUSING	Hight Temp.Plastic UL94V-0/BLACK
Ⓐ		1	SHELL	COPPER ALLOY/AU PLATED OVER Ni

BOM LIST

CONNTHERM

GENERAL TOLERANCE	
XX. ±0.50	
X. ±0.35	X.° ±2.0°
.X ±0.25	.X° ±1.0°
.XX ±0.15	.XX° ±0.5°

SCALE: 1:1
UNIT: mm
SIZE: A4

DRAWN	DATE 02/23'12	DWG. NO.
CHECK	DATE	PARTS NO.(INTENDED USE) GSM-IPX/SMA-1G-105
APPROVE	DATE	

TITLE
RF PLUG I GENERATION SERIES
TO SMA FEMALE

REV. X1

SHEET 1/1

1. Application

This style products are designed for Mobile phones, Wireless LAN, Mini-PCI, Bluetooth, PDA, GPS, electronic measuring instruments, etc
LAN, Mini-PCI ,PDA, GPS

2.Scope:

This specification covers the requirements for product performance, test methods and quality assurance provisions of USS RF Cable I Connectors.

3. Technology Parameters

3.1 Voltage Rating 60VAC (R.M.S)
3.2 Frequency Range DC~6G Hz
3.3 Nominal Characteristic Impedance 50±5 ohm
3.4 Operating Temperature Range -40℃～+85℃
3.5 Operating Humidity 95% R.H.MAX

4. Ratings

4.1 Insulation Resistance 500 M Ohm
4.2 Contact Resistance
4.2.1 Inner Contact 20 m ohm Max.
4.2.2 Outer Contact 20 m ohm Max.
4.3 Withstand Voltage 200V AC 1 Min.
4.4 V .S .W. R*

Specification	DC~3GHz	3~6GHz	Cable length
DIA=1.13mm Coaxial Cable Assembly	1.6 max	1.8 max	25~1000 mm

4.5 Cable

ITEM		Unit	Details
Inner Conductor	Material	-	Silver Plated copper
	Composition	No/mm	7 X 0.08
	Nominal O.D.	mm	0.24
Dielectric Core	Material	-	Extruded FEP
	Nominal O.D.	mm	0.68
	Color	-	Natural
Outer Conductor	Material	-	Tin-coated Copper Wire
	Composition	-	16/4/0.05
	Nominal O.D.	mm	0.95
Outer Jacket	Material	-	Extruded FEP
	Outer diameter	mm	1.13±0.05
	Color	-	Black/White/Gray/Blue

5. Electrical Performance

No	Items	Test Condition	Specifications
5.1	Contact Resistance	(EIA 364-23) Solder the receptacle connector to the test board and mate the plug connector together, then measure the contact resistance as shown in figure 1 by the four terminal method。 Open circuit voltage: 20mV MAX Circuit current: 10mA MAX	Inner contact: Initial: 20mΩ MAX After: 25mΩ MAX Ground contact Initial: 20mΩ MAX After: 25mΩ MAX
		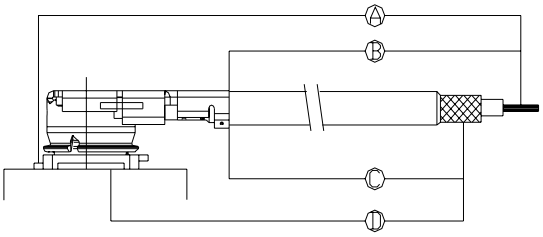 Inner Contact A - B Ground Contact - C **Figure 1**	
5.2	Insulation Resistance	Mate the plug and receptacle connector together, and then, apply DC 100 V Voltage between the inner contact and the ground contact in accordance with EIA 364-21	Initial: 500 MΩ MIN After : 100 MΩ MIN
5.3	Dielectric withstanding voltage	Mate the plug and receptacle connector together, and then apply AC 200 V between the inner contact and the ground contact in accordance with EIA 364-20	No flashover, No sparkover, No excess leakage, No breakdown

No	Item	Test Condition	Specifications
5.4	V.S.W.R	Measure the V.S.W.R as shown in figure 2 by the network analyzer Frequency：0~6GHz Note: 1. Cable type connectors were measured with SMA conversion adapters attached to both ends of the harness product of a suitable 100mm cable.	DC~3GHz：1.6MAX 3~6GHz：1.8MAX

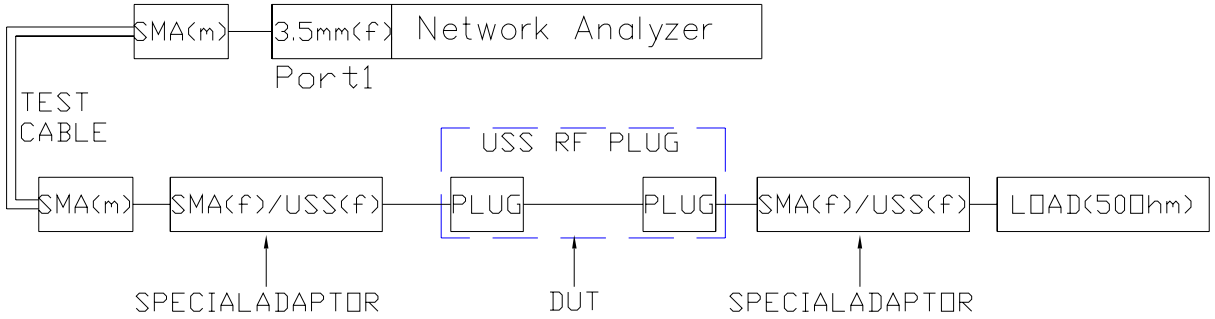

Figure 2

6. Mechanical Performance

No	Items	Test Condition	Specifications
6.1	Un-mating Force	Solder the receptacle connector to the test board and mate the plug connector， then measure the un-mating force at speed 25± 3mm/minutes along by the push-push machine	1.Initial： 5N MIN 2.After 30 Cycle: 3N MIN
No	Items	Test Condition	Specifications

	6.2	Crimp strength	Pull the cable as shown in Figure 3 at speed of 25±3mm/minute through tensile strength machine.	10N MIN
			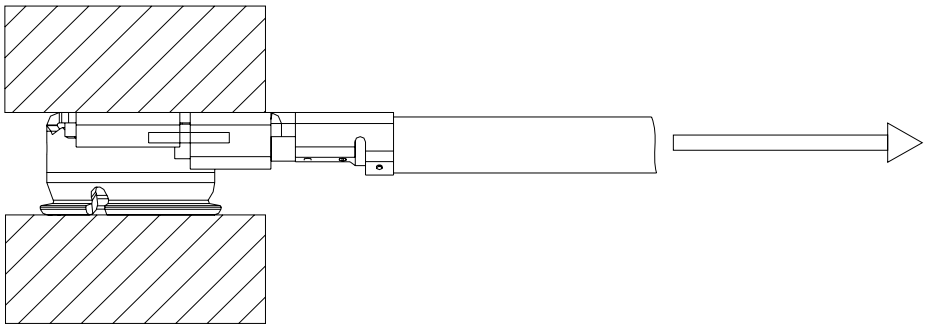 **Figure 3**	
	6.3	Durability	Mate and un-mate the receptacle connector(soldered to the test board) and plug connector 30 cycles at the speed of 25± 3mm/minutes along the mating direction by the push-push machine	Appearance: No abnormality Contact Resistance: Shall meet 5.5.1
	6.4	Cable retention force	After the connectors are mating, do not apply a load to the cable in excess of the values indicated in the diagram below.	No electrical discontinuity grater than 1μs shall occur

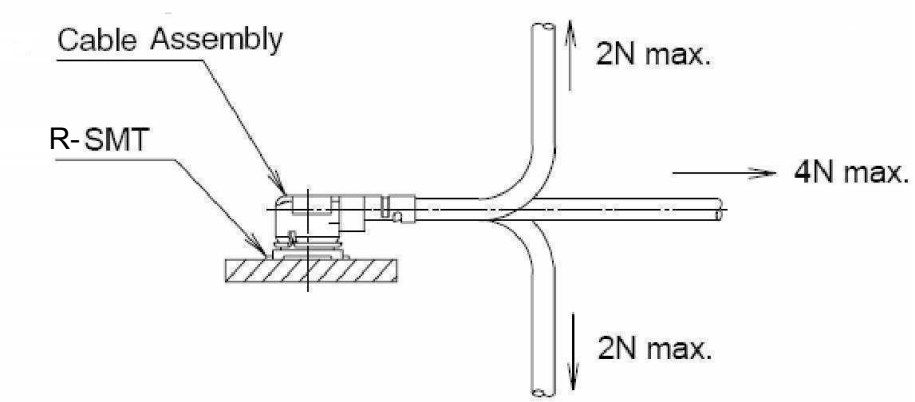

Figure 4

6.5	Vibration	Apply the following vibration to the mating connector. During the testing,run 100mA DC to check electrical discontinuity. Frequency:10Hz→ 100Hz→ 10Hz/approx 20minutes. Half amplitude,Peak value of acceleration: 1.5mm or 59m/s² (6G) Directions,cycle:3 mutually perpendicular direction, 3 cycles about each direction	Appearance: No abnormality Contact Resistance: Shall meet 5.5.1 No discontinuities of 1μs or longer duration

6.6	Shock	EIA 364-27 Condition A The object of this test procedure is to detail a standard method to assess the ability of a connector to withstand specified severity of mechanical shock. Peak value of acceleration:735m/s² (75G) Duration :11ms Wave form : half sinusoidal Directions,cycle : 6 mutually perpendicula direction, 3cycles about each direction	Appearance: No abnormality Contact Resistance: Shall meet 5.5.1 No discontinuities of 1μs or longer duration

7. Environmental Performance

No	Items	Test Condition	Specifications
7.1	Humidity	Apply the following environment to the mating connector in accordance with EIA 364-31 Method III Test Condition B Temperature : 25~65℃ Humidity : 90~95%R.H Duration: 96 hours	Appearance: No abnormality Contact Resistance: Shall meet 5.5.1 Insulation Resistance: Shall meet 5.5.2 Dielectric withstanding voltage Shall meet 5.5.3
7.2	Thermal Shock	Apply the following environment to the mating connector in accordance with EIA 364-32 Test Condition I Temperature : -55~85℃ Transition time: : 5min. MAX Cycles: 5 Cycles	Appearance: No abnormality Contact Resistance: Shall meet 5.5.1 Insulation Resistance: Shall meet 5.5.2

			Dielectric withstanding voltage Shall meet 5.5.3
7.3	High Temperature Life	Apply the following environment to the mating connector Temperature : 90±2℃ Duration : 96 hours	Appearance: No abnormality Contact Resistance: Shall meet 5.5.1 Insulation Resistance: Shall meet 5.5.2
7.4	Salt Spray	EIA 364-26 Test Condition A Apply the following environment to the mating connector Temperature : 35±2℃ Relative Humidity : 90~98%R.H Salt water density: 5±1% Duration : 48 hours	Appearance: No abnormality Contact Resistance: Shall meet 5.5.1

8.Others

No	Items	Test Condition	Specifications
8.1	90° Bending Test.	Make the cable assembly with 1kg load connected in the end stayed in the horizontal station by the bend testing tool, Then, let it free fall ride and stayed in the final position for one miniute.finally, repeat the above-mentioned steps for 10cycles ,then having a open&short test. Pls see the following figure 5 for details. 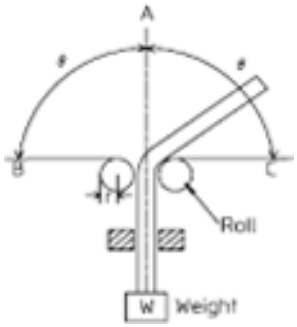 FIGURE 5	Appearance: No abnormality Open&Short Requriment：Short

9. Plug Specification

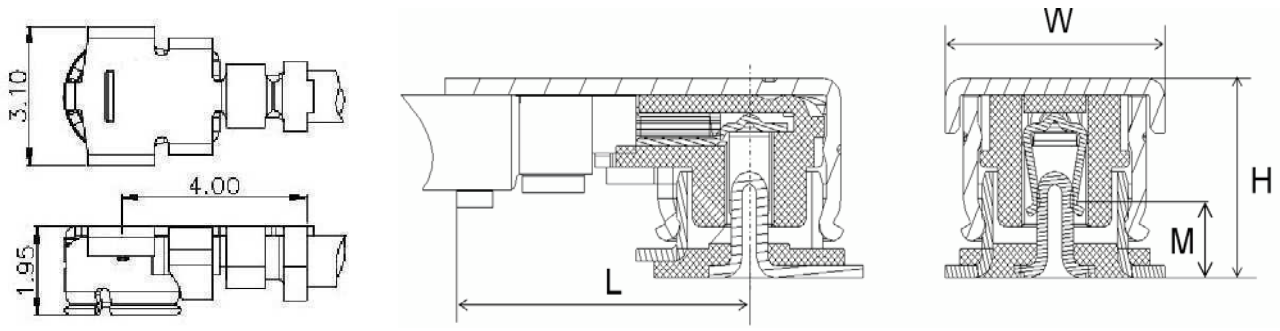

Mati Dime sio mm				
Item	L	H	W	M
DIA=1.13mm Coaxial Cable Assembly	4.00±0.2	2.50±0.1	3.1±0.2	0.9±0.20

10. Usage Precaution

No	Items	Test Condition	Specifications
10.1	(1) Connection/ disconnection of connectors	1).To disconnect connectors, insert the end portion of ECT Extraction jig under the connector flanges and pull off vertically, in the direction of the connector mating axis 2).To mate the connectors, the mating axis of both connectors must be aligned and the connectors can be mated. The "click" will confirm fully mated connection. Do not attempt to insert on an extreme angle.	
		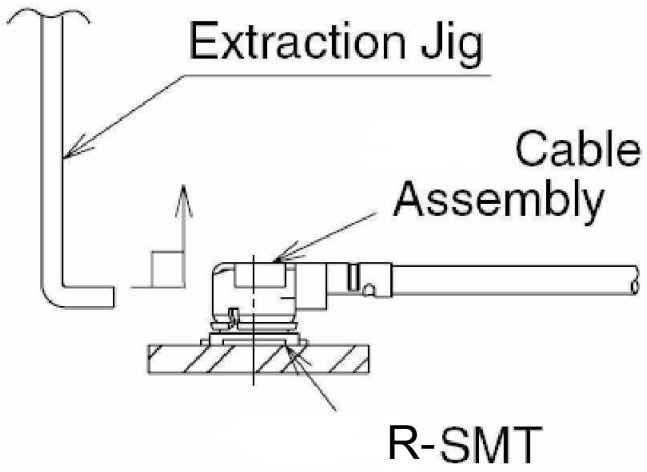 **Figure 6**	
10.2	Precautions	Do NOT forcefully twist or deform wires.	
10.3	Stockpile condition	Use this product within 6 months after receipt	